HR94D1

Door Threshold & Side Screen Safety

Dimensions

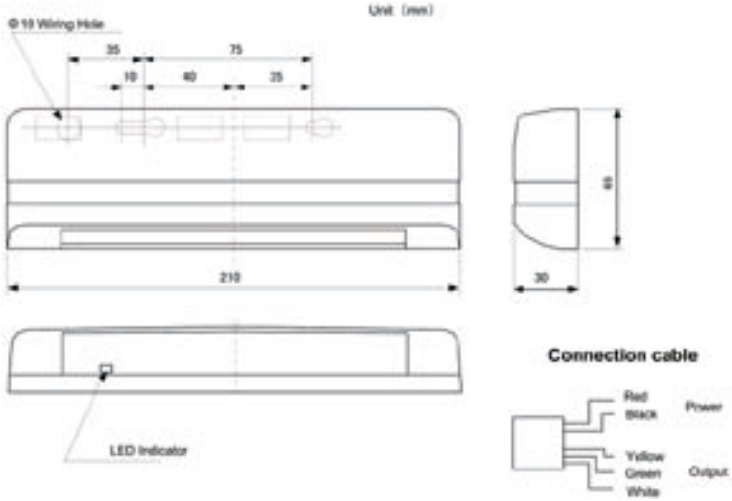

Model	HR94D1 (Motion & Presence)
Detection Method	Active Infrared Detection
Installation Height	Max 3000 mm
Pattern Adjustments	Pattern Width (Wide or Narrow) Angle adjustment 0° to 5° in 3 steps
Presence Timer	2, 15, 60, 180 sec.
Power Supply	12 to 32V AC or DC ±10%
Power Consumption	AC24V-2VA, AC12V-1.5VA DC24V-55mA, DC12V-85mA
Output Contact	Relay contact: DC50V 0.1A (Resistance Load) Yellow Cable: Close when detecting Green Cable: Open when detecting White Cable: Common
Output Holding Time	Approx. 0.5 sec.
LED Indication	Power on: Green = ON Detecting: Red = ON Hunting Door: Orange = ON Self Diagnostic Function: Red/Green = Flashing
Temperature Range	-20°C to +60°C
Weight	Approx. 200g
Color	Black & Silver
Accessories	Connection Cable, Mounting Template, Mounting Screws, Installation Instructions

NOTE: Specifications may change without prior notice

Detection Area

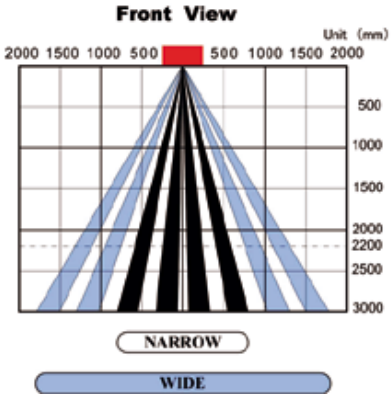

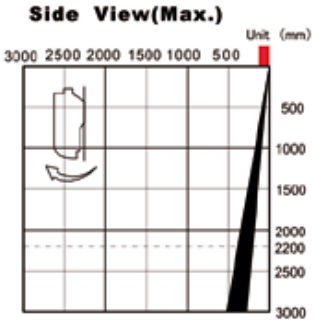

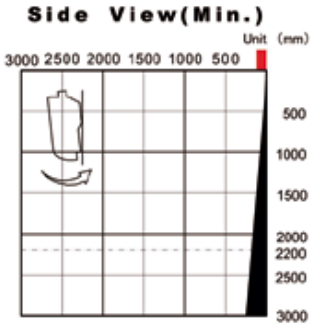

Width Adjustment

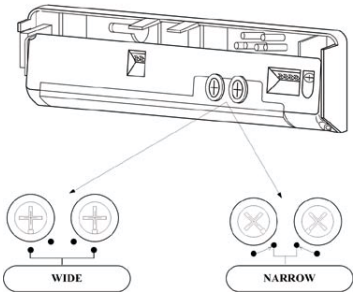

Plan View (Max.)

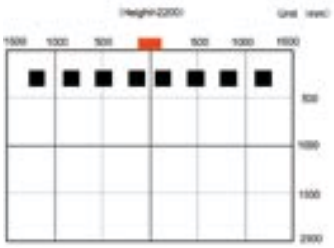

Plan View (Min.)

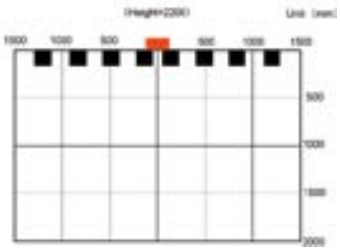

HOTRON IRELAND LTD.
37 Dublin Street (2nd Floor), Carlow, Ireland.
Tel: +353-(0)503-40345 · Fax: +353-(0)503-40543
URL: http://www.hotron.com

HOTRON CO. LTD.
1-11-26 Hyakunin-Cho Shinjuku-ku, Tokyo 169-0073, Japan.
Tel: +81-3-5330-9221 · Fax: +81-3-5330-9222
URL: http://www.hotron.co.jp